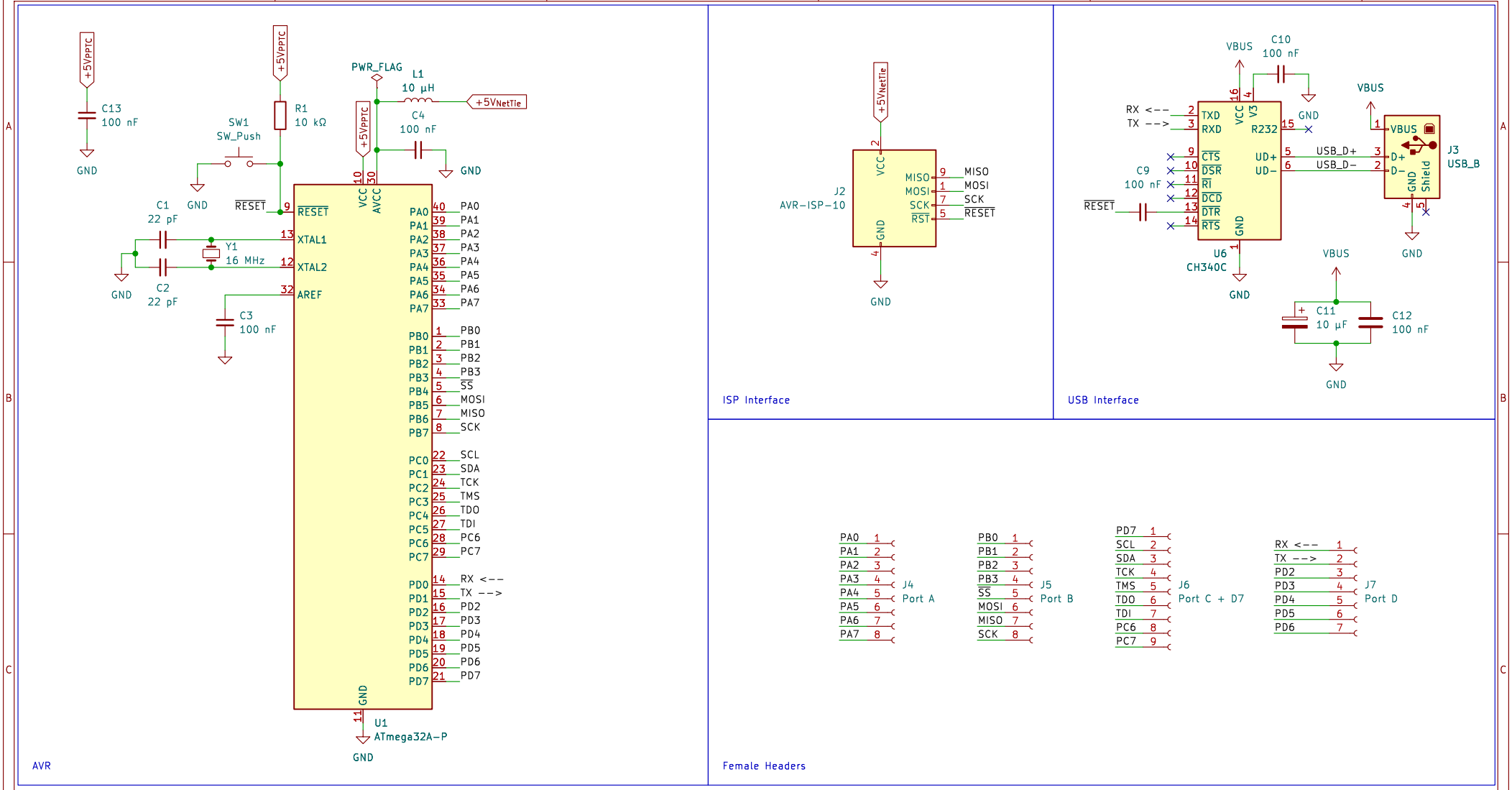

Power Management Circuitry

File: Power Management Circuitry.kicad_sch

Rx and TX labels and direction arrows are from the prespective of the 32A

Author: Morad Tamer
Team Exotic

Sheet: /
File: [EXOTIC] AVR Kit.kicad_sch

Title: ATMEGA32A AVR Kit

Size: A4	Date: 2023-10-28	**Rev: C1.2**
KiCad E.D.A. 8.0.1-75-g05dedbd892		Id: 1/3

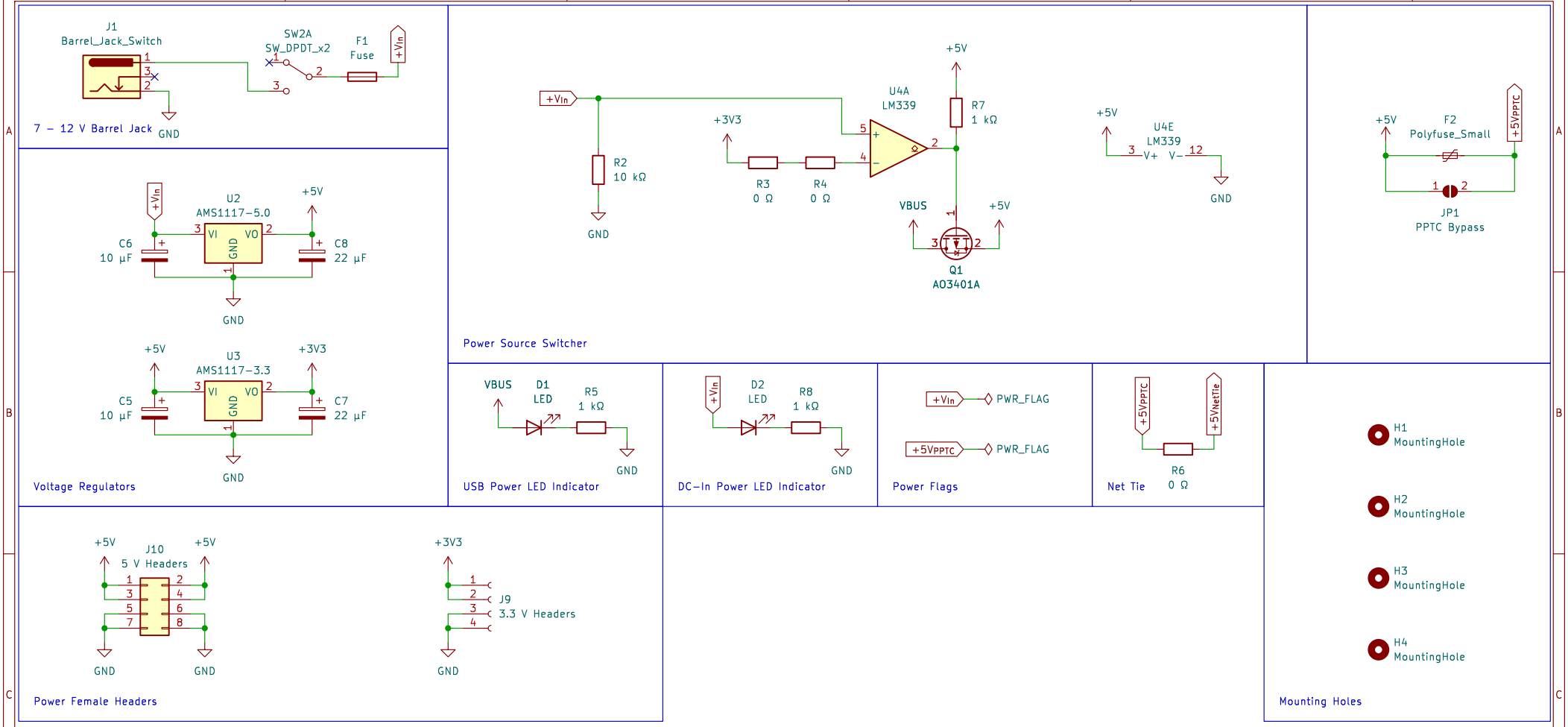

Power Chain:
+Vin >>> +5V >>> +5VPPTC >>> +5VNetTie Load >>> GND

Unplaced Units

File: Unplaced Units.kicad_sch

Author: Morad Tamer
Team Exotic

Sheet: /Power Management Circuitry/
File: Power Management Circuitry.kicad_sch

Title: ATMEGA32A AVR Kit

Size: A4	Date: 2023-12-22	**Rev: C2.5**
KiCad E.D.A. 8.0.1-75-g05dedbd892		Id: 2/3

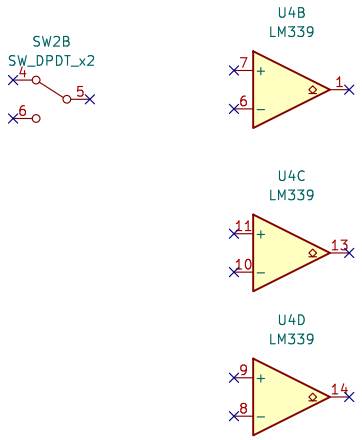

Author: Morad Tamer
Team Exotic

Sheet: /Power Management Circuitry/Unplaced Units/
File: Unplaced Units.kicad_sch

Title: ATMEGA32A AVR Kit

Size: A4	Date: 2023-12-08	**Rev: C1**
KiCad E.D.A. 8.0.1-75-g05dedbd892		Id: 3/3